BST6010L2—

-
- ≤ ±
-
-
-
-
-
-
-
-

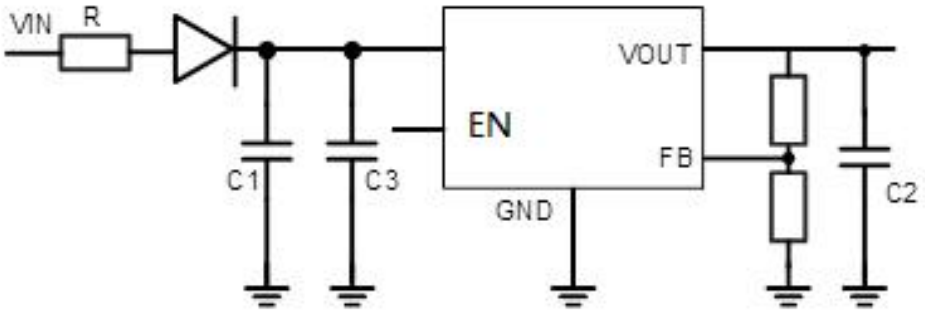

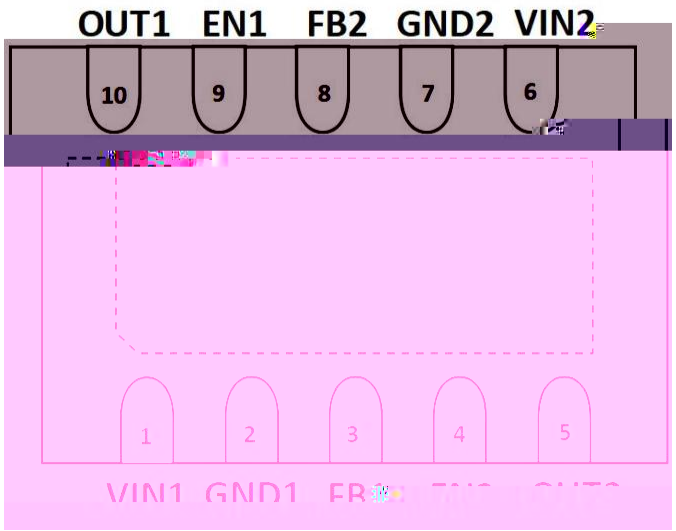
OUT1
EN1
FB2
GND2
VIN2
10
9
8
7
6
1
2
3
4
5

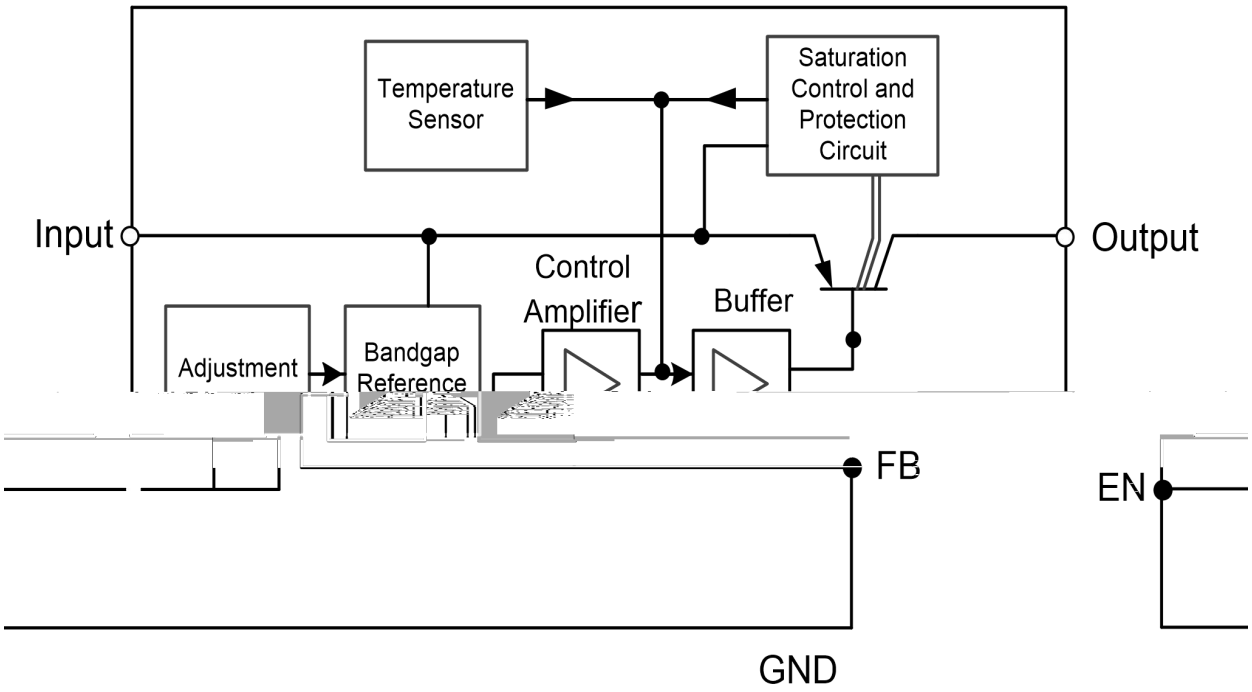
Temperature Sensor
Saturation Control and Protection Circuit
Input
Output
Control Amplifier
Buffer
Adjustment
Bandgap Reference
FB
EN
GND

SIGLENT
Stop
M 200ms
Delay -7.00ms
Sa 5.00MSa/s
Curr 14Mpts

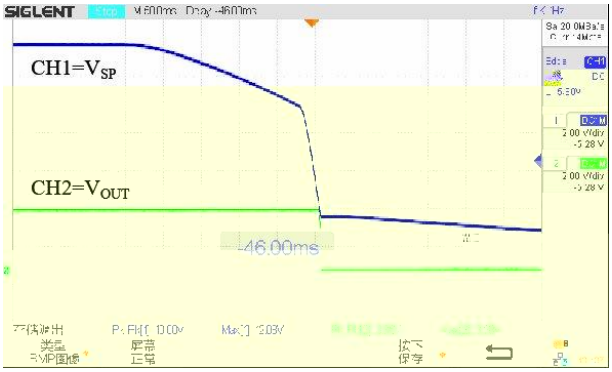
SIGLENT
CH1=V_{SP}
CH2=V_{OUT}
46.00ms

EN

V

R_1 R_2

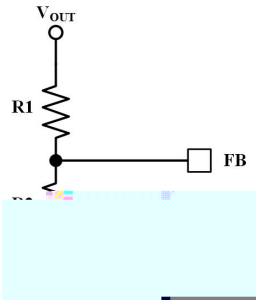

C_{IN}

C_{OUT}

× ×

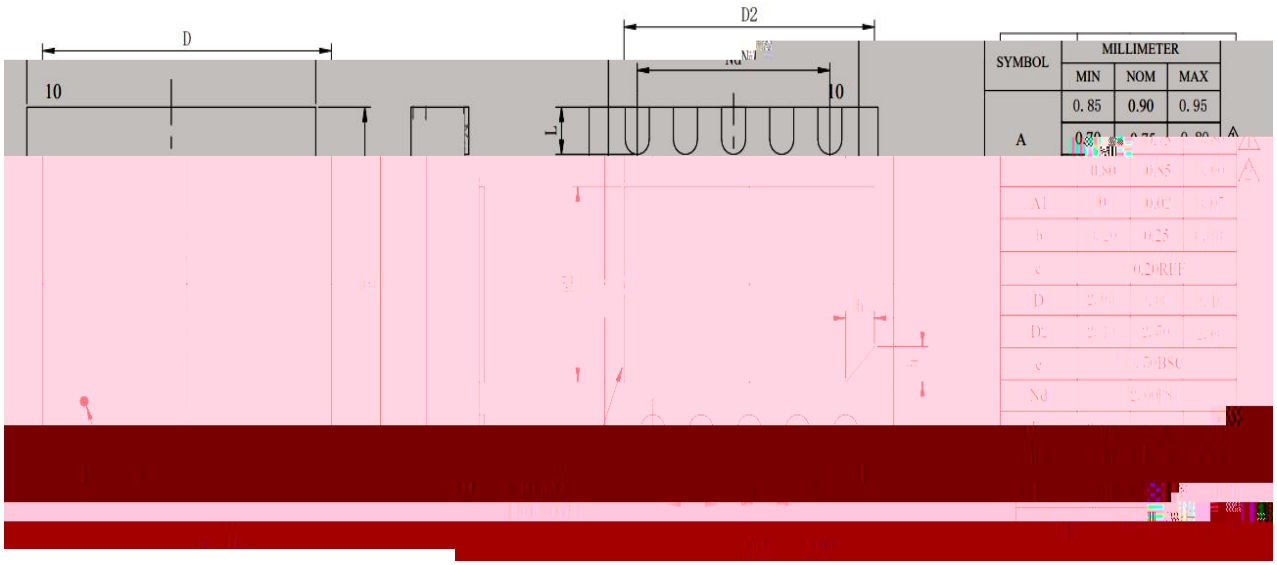
D
D2
10
10
L
SYMBOL
MILLIMETER
MIN
NOM
MAX
A
0.85
0.90
0.95
A1
b
c
0.20REF
D
D2
e
0.50BSC
Nd
2.00BSC

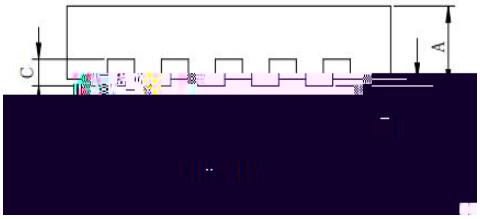
C
A