BSS6050H——

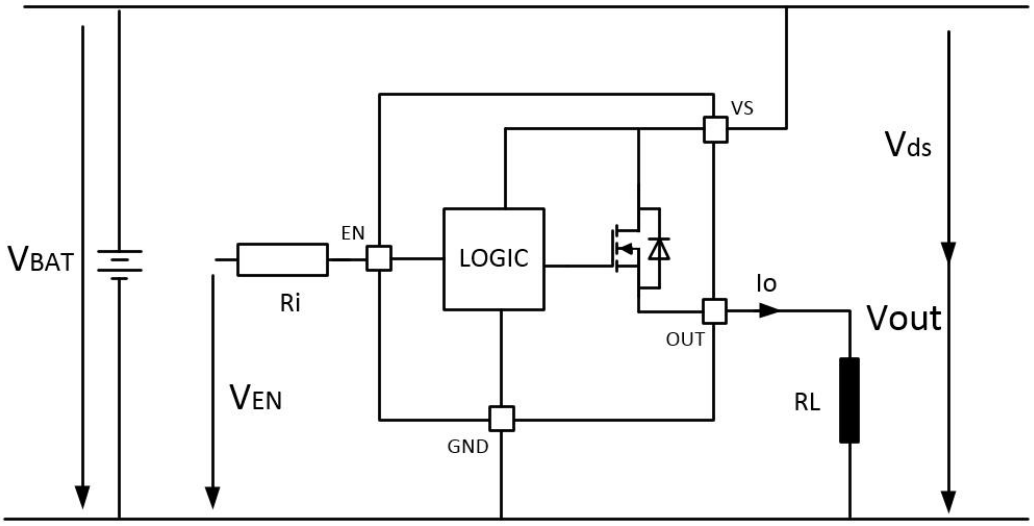

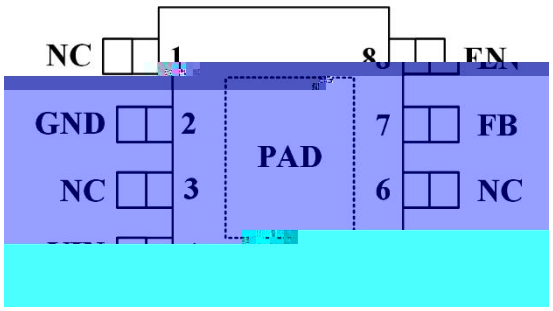
NC
1
8
GND
2
PAD
7
FB
NC
3
6
NC

[1]

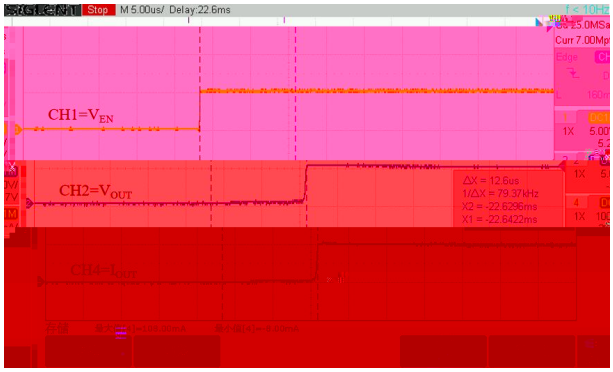
CH1=V_{EN}
CH2=V_{OUT}
CH4=I_{OUT}

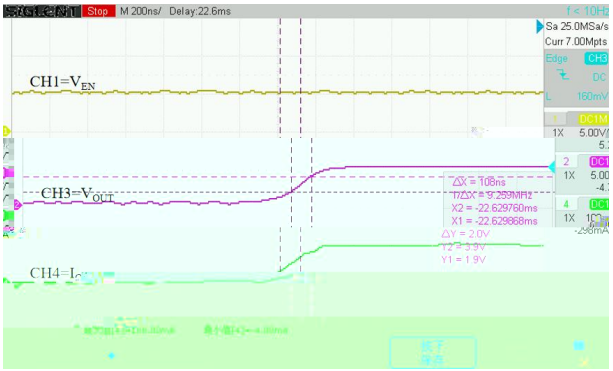
CH1=V_{EN}
CH3=V_{OUT}

CH1=V_{EN}
CH3=V_{OUT}
CH4=I_{OUT}

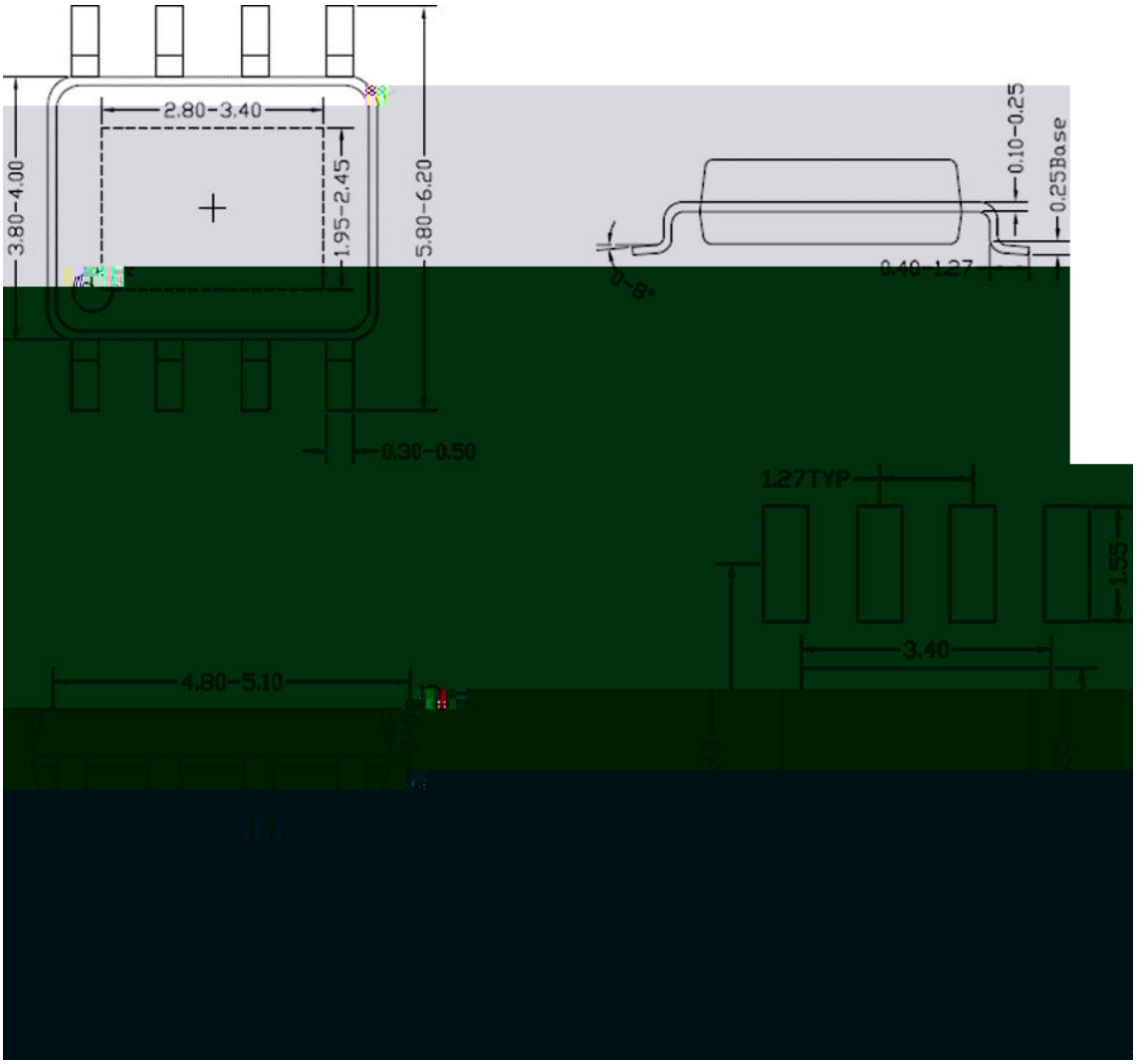
2.80-3.40
3.80-4.00
1.95-2.45
5.80-6.20
0.30-0.50
0.10-0.25
0.25Base
0-8°
0.40-1.27
1.27TYP
1.55
3.40
4.80-5.10